WuduMate

Accessories/Options

- Shattaf Douche Set / bidet spray with chromed brass spray, hose, wall bracket & isolator valve - Premium Range
- Shattaf Douche Set / bidet spray with plastic spray, hose, wall bracket & isolator valve - Regular Range
- WuduMate Shattaf Time Delay Valve
- WuduMate Retail Bathroom Mixer TMV

WuduMate

TURKISH TOILET

Product Code: WM-WM-TT

Toilet with a bidet spray inside the bowl of the toilet, which is operated by an on/off isolator valve located conveniently to hand. Thereby,water is kept inside the bowl, rather than splashing on the floor causing unpleasantness and a potential slip hazard for other users.

Suitable settings include homes, municipal buildings, universities, hospitals, offices and mosques.

The WuduMate Turkish Toilet comes complete with seat, manual water mixer, dual cistern flushing mechanism, (normally 3 litres for partial flush and 6 litres for full flush, but adjustable) and fittings.

Colour White

Material Vitreous China

Weight Net: (36kg) 79.4lbs Gross: (38kg) 83.77lbs

Carton Size (mm L700 x W400 x H690) inches L27.56 x W15.74 x H27.16

Special Notes
P Trap fitting 250mm, 300mm.
In some countries including the UK, (Category 3, 4 and 5 UK plumbing regulations), regulations exist which stipulate that a back flow preventer is installed in line to the bidet nozzle, in conjunction with a separate header tank, to avoid the possibility of germs flowing back to the main water supply.

Alternative Models
Hybrid Toilet, Squat Toilet

Handles

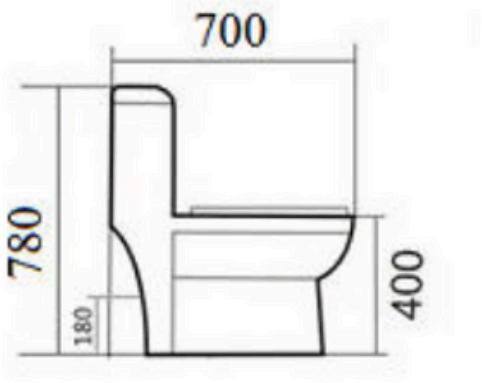

All dimensions in mm

The information in this specification sheet reflects the current technical specifications at the time of print. We reserve the right to change the technical or physical specifications without prior notice. All WuduMate images and symbols are exclusive property of Specialist Washing Co. Specialist Washing Co. accept no liability for loss or damage caused by improper installation. Any reproduction or retransmission or republication of any part of this specification sheet is strictly prohibited, unless prior written permission has been granted by Specialist Washing Co, E&OE.

+44 (0) 1784 748080 +1 513-815-3070 sales@wudumate.com