WuduMate®

Product

IR2584CP - Wall Mounted Infrared Tap (Battery Operated)
IR2585CP - Wall Mounted Infrared Tap (Mains Operated)

Technical Specification

Max Inlet Pressure (static):	***8 Bar***
Min Inlet Pressure (dynamic):	***1 Bar***
Max Inlet Temperature:	***70°C***
Power Supply:	***6V Lithium Battery (Included)*** ***230V AC to 6V DC Transformer***
Battery Life Cycle:	***220.000 Cycles***
Flow Rate:	***3.6 L/min (with Flow Regulator)***

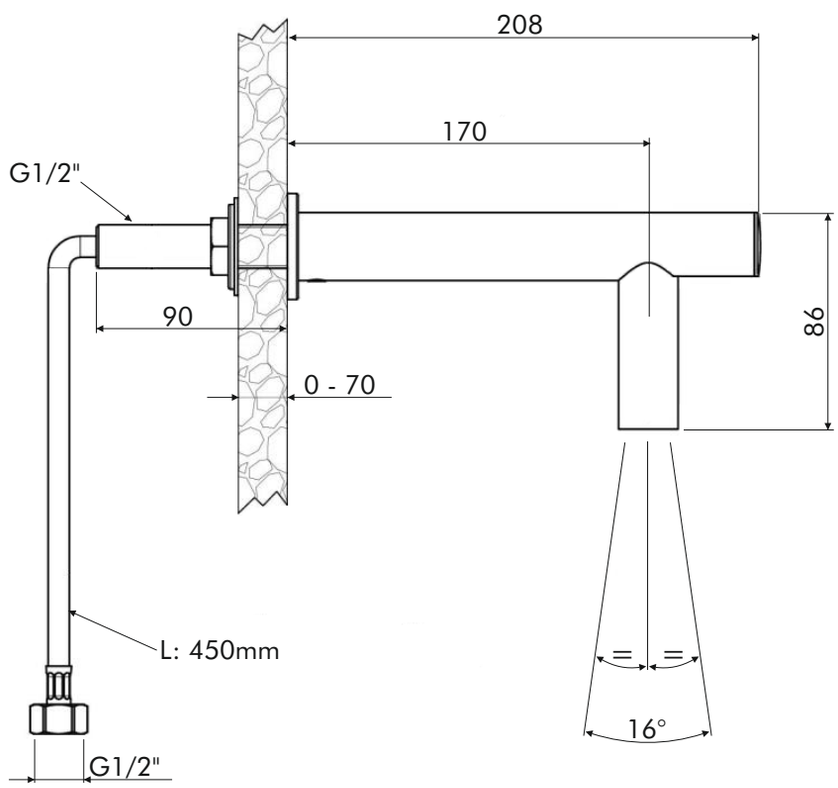

Additional Information

Brass construction with a chrome finish

Infra red contactless operation

Auto self closing tap, preventing water wastage

24 hour anti-stagnation flushing cycle

Pre-set sensor range

Vandal proof feature, shutting off the flow of water after 60 seconds of continuous flow

Low battery LED indicator, the tap stays closed and the LED will continuously flash when the battery is exhausted