ACCLAIM CISTERN

Exposed Cistern

Applications

Contemporary styled plastic exposed cistern that can be used in light to medium duty applications

Water-Saving

Can be used with 6/7/9 litre convertible Duoflush syphons and also 6/4 litre Dudley Niagara dualflush valve for further water saving which is approved by the European Water Label Scheme.

Features

- ☑ Cistern body made from high impact polystyrene.
- ☑ Side inlet as standard, bottom inlet available as an optional extra.
- ☑ Internal/ external overflow warning.
- ☑ Acclaim S is lever operated and can be installed at both high and low level.
- ☑ Acclaim V is pushbutton operated suitable for low level use.

Dudley
Water saving solutions

ACCLAIM CISTERN

Exposed Cistern

Dimensional Data

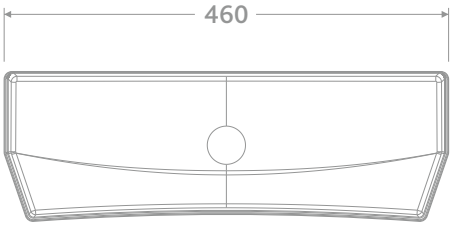

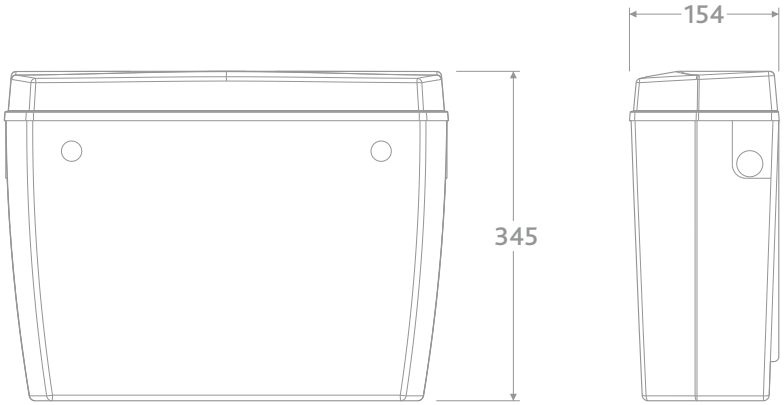

Technical Data

Acclaim S	Lever operated cistern
Acclaim V	Pushbutton operated cistern
Inlet Options	Side inlet as standard, bottom inlet available

Dudley
Water saving solutions